CITY OF VALDEZ
Project Title: Civic Center ADA Restroom Remodel
Project No.: 13-350-1205
Contract No.: 1134

TO: **All Recipients** **Date: October 21, 2013**

SUBJECT: **Addendum No.1**

This **25** page Addendum forms a part of the project scope documents and modifies the project scope for the above-referenced project. **Acknowledge receipt of this Addendum in the space provided on the Bid Form**. Failure to do so may subject the Bidder to disqualification.

This Addendum makes the following changes and/or clarifications:

1. The deadline for questions regarding this project is 2:00pm local time on October 24, 2013. All questions must be submitted to the Project Manager in writing via e-mail to: lvititow@ci.valdez.ak.us before this deadline.

2. The bid opening date has been changed to 2:00 pm local time on November 14, 2013. All bids will be due at this time.

3. **IMPORTANT PLEASE READ CAREFULLY**: Please replace contract pages 4, 6 and 7 with the revised attached contract pages 4, 6 and 7. Note the verbiage that has been added to these pages is in "red" and below is an outline of the required information that must be included within the bid documents/bid package or your bid will be rejected.
   The bidder must provide a list of references for 5 previous commercial, institutional, or municipal projects within the past 7 years whereas acting as a general, prime, or sub-contractor carried a contract "themselves" in the amount of $250,000 or more. These references must be for completed commercial, institutional, or municipal contracts and include:
   A) Project Name
   B) Contract Amount
   C) Project Owner's Name
   D) Project Owner's Contact Information

4. Question: Do you want unit heaters and diffusers painted?
   Answer: Yes, we would like the unit heaters and diffusers painted to match the ceiling.

5. Question: Is there access under floors and over ceilings?
   Answer: There is no access under floors due to being slab on grade. There is access thru the ceiling hatches within the near vicinity of the restrooms.

6. Question: What is the ceramic tile grout color?
   Answer: The grout color will be chosen by the Owner once the awarded contractor's ceramic tile submittal has been approved by the Owner.

7. Question: Would 5/8" Hardiebacker board be an acceptable substitute for 5/8" waterproof GWB?
   Answer: Yes, 5/8" Hardiebacker board is acceptable.

8. Question: Is there a spec for the door hardware? Including the type/model of the push button operators?
   Answer: Attached to this "Addendum 1" are the Falcon door operator, the push plate box (8310-869S), push plate receiver (8310-865) and wireless push plate (8310-852TWP) specs.

9. Question: Will the contractor be able to use existing power in the Civic Center or will we have to provide temporary power for our work?
   Answer: Existing power is available to the contractor on-site at the Civic Center. If the contractor requires additional power needs to complete the work then the contractor will be responsible for providing alternate power sources.

10. Question: Do the existing walls have cement backer board on them with tile over top or just GWB with tile over top?
    Answer: According to the 1980 Original plans no cement backer board was used
    Wall type 6 – has 5/8" gypsum board with 5/8" water-proof gypsum board layered on top (on restroom side)
    Wall type 5 – has 5/8" gypsum board ea. Side
    Wall type 4 – has 5/8" gypsum board
    Wall type 2 – has 5/8" gypsum board ea. side

11. Question: Sheet note 6 on A301 and A302 make references to the contractor testing for asbestos. Is there abatement to be done as part of this project?
    Answer: The COV has scheduled for asbestos testing to take place prior to the bid opening so the contractor will not be responsible for the testing. The COV will attach within an addendum the asbestos report findings once received from the consultant. If the report comes back stating that there is abatement required, then the contractor will be responsible for providing all abatement necessary. The contractor will need to include all associated costs for any abatement necessary within their bid documents.

12. Question: What year was the building originally built?
    Answer: The as-builts are dated 1980 and the City occupied the Civic Center in July of 1982.

13. Question: What is the required thickness of the rubber flooring?
    Answer: The required thickness for the rubber flooring is 3.0 mm min. (for commercial traffic durability).

14. Question: Is Builder's Risk required? If so, are we only covering the work on the building that the contractor is doing?
Answer: The awarded Contractor shall submit to the Owner evidence of All Risk Builder's Risk Insurance for all physical loss, including earthquake and flood (100% completed value basis) upon the entire work naming the Owner, the Contractor and the subcontractors as additional insured parties and as their interests may appear to the full contract sum thereof, until the project is completed by the Contractor and accepted by the Owner. The policy, by endorsement, shall specifically permit partial or beneficial occupancy at or prior to substantial completion or final acceptance of the entire work.

15. Question: What permits is the general contractor required to procure?
Answer: The City has already obtained a Fire Marshal's Permit for this project and has paid for the associated fees for this permit. The awarded contractor will be required to contact the Community Development/ Building Department and obtain all required city building permits for this project. The City will waive any associated fees for these required permits, so there is no cost to the contractor.

16. Question: Is there as-builds of the original building that can be provided?
Answer: The city has some piece meal sheets of as-builds and will attach these under "Related Documents" within the project's bid posting on the city's website at: www.ci.valdez.ak.us . If you are still not finding what you need regarding "as-builds", you may contact the Project Manager, Lindy Vititow, at (907) 835-5478 Ext. 5 and we will do our best to accommodate you.

End of Addendum

City of Valdez
Instructions to Bidders

Project: Civic Center ADA Restroom Remodel
Project Number: 13-350-1205/ Contract Number: 1134

CAUTION:
Your bid may be rejected if it is not properly executed. Check that the following items have been accomplished to help assure a responsive bid. Please read Sections 6 and 7 carefully.

1. Bid Form
   A. The Bid Form has been executed and signed.
   B. Addendum Acknowledgement Form has been executed and signed.
2. Bid Security or Bid Bond
   A. An executed Bid Security (Bid Bond) in the amount indicated on the Invitation to Bid.
   B. Verify that the Certificate showing the Corporate Principal on the form is executed if applicable.
3. Alaska Business License, a copy your current license must be included.
4. Alaska Contactor Certificate of Registration
   A. A copy of your current Alaska Contractor License of Registration in the bidder's name must be included with the bid.
   B. The contractor is required to verify that the appropriate license(s) is in place prior to submitting their bid for the project's scope of work.
5. A bid may be rejected if it contains any alterations or erasures that are not initialed by the signer of the bid.
6. Required Bidder Qualifications and References Information must be included within the Bid Package or the bid will be rejected. Please refer to Addendum 1 for an outline of this required information.

Note: Any certified checks may be held uncollected at the risk of bidders submitting them.

1. General

Bidders are requested to study and follow these instructions about the method and form for submitting bids to avoid having their bid rejected.

Bidders will find all required forms and documents contained within this assembly. Please notice under Section 7, Required Documents for Bid, as to which forms and documents are required for your bid to be considered.

2. Explanation to Bidders

Requests from bidders concerning interpretations or clarifications of the bid documents shall be made in writing to the project manager or project engineer. Such requests shall arrive at least three working days prior to the date for opening bids. There needs to be sufficient time allowed for a reply to reach all bidders before the submission of the bids. Explanations made will be in

original completed form was provided within your sealed bid. Facsimile modifications shall not reveal the total amount of the original or revised bid.

Facsimile number to use is (907) 835-5574.

7. Required Documents for Bid

The following listed documents are to be completed and submitted at the time of bidding. Deviation from these requirements will be grounds for rejection of the bid.

A. Addenda Acknowledged Form, fully completed original (see Item 6 above also)
B. Bid Schedule, fully completed original (see Item 6 above also)
C. Bid Bond, original
D. Copy of current and appropriate Alaska Contractor License for this Scope of Work.
E. Copy of current Alaska Business License
F. Required Bidder Qualifications and References Information must be included within the Bid Package or the bid will be rejected. Please refer to Addendum 1 for an outline of this required information.

8. Required Documents for Award of the Contract

The following documents must be executed prior to award of the contract and the initiation of work. Contractors are urged to expedite the completion of these documents. This will allow the contract award and notice to proceed to be issued expeditiously. These documents must be submitted within ten (10) working days after the date of notice of intent to award.

A. Contract Bond (Payment Bond: See Bonding Requirements below)
B. Contract Bond (Performance Bond: See Bonding Requirements below)
C. Certificate of Insurance naming City of Valdez as an "Additional Insured"
D. Proof of Current Registration if a corporation
E. Non-collusion Affidavit
F. Agreement
G. City of Valdez Business Registration
H. Executed W-9 Form

9. Bonding Requirements

A. Bid Security

Bid Security is required and shall be in the form of a Certified Check for each bid or a Bid Bond prepared on the attached Bid Bond Form.

The Bid Bond must be executed by the bidder as principal and be executed by a surety company authorized to transact business in the State of Alaska. The Owner must approve the surety company.

The Bid Security or Bid Bond shall be issued for five percent (5%) of the bid amount.

Bid Securities will be returned to all except the three lowest bidders. The remaining certified checks or bid bonds will be returned, after the Owner and the accepted bidder have executed the Contract. Failure of the Owner to return the certified checks or bid bonds in a timely manner will create no liability on the part of the Owner. No award has been made within sixty (60) days after the bid opening, all bidders except the one who has received the notice of intent to award may request the return of heir cash, check or bid bonds.

B. Contract Payment Bond

A Contract Payment Bond is not required if the total dollar amount of the contract is less than One Hundred Thousand Dollars ($100,000).

A Contract Payment Bond is required if the total dollar amount of the contract is equal to or greater than One Hundred Thousand Dollars ($100,000). Contract Payment Bond will be in the amount of One Hundred Percent (100%) of the Bid amount.

Contract Payment Bond shall be prepared on the Payment Bond Form that is attached. The Bond must be executed by the Contractor as principal and executed by a surety company authorized to transact business in the State of Alaska. The Owner must approve the surety company.

C. Contract Performance Bond

A Contract Performance Bond is not required if the total dollar amount of the contract is less than One Hundred Thousand Dollars ($100,000).

A Contract Performance Bond is required if the total dollar amount of the contract is equal to or greater than One Hundred Thousand Dollars ($100,000). Contract Performance Bond) will be in the amount of One Hundred Percent (100%) of the Bid amount.

Contract Performance Bond shall be prepared on the Performance Bond Form that is attached. The Bond must execute by the Contractor as principal and executed by a surety company authorized to transact business in the State of Alaska. The Owner must approve the surety company.

Section 2.80.080 of Valdez City Code provides for a modified contractor bond. Bidders shall familiarize themselves with exemptions allowed and the requirements for exemptions.

10. Bidder Qualifications

Before a bid is considered for award, the apparent low bidder may be requested to submit a statement of facts or proof in detail as to his previous experience in performing similar or comparable work, technical abilities, equipment, size, manpower and financial resources to complete and perform the work as outlined in the contract documents, addendums, plans and specifications.

8310-852/-853 WIRELESS PUSHPLATES
USER'S GUIDE

WIRELESS STAINLESS STEEL ACTUATOR SWITCHES

1 Description

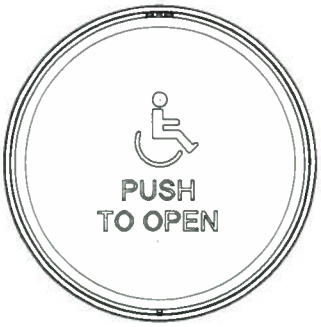

6" ROUND
8310-852TWP (shown)
8310-852WP (not shown)

4.75" SQUARE
8310-853TWP (not shown)
8310-853WP (shown)

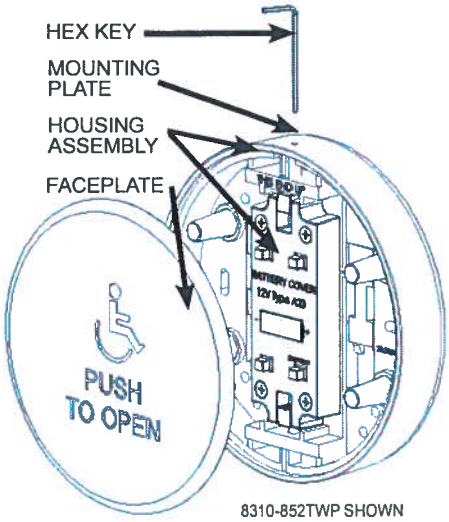

8310-852TWP SHOWN

2 Specifications

DESCRIPTION	SPECIFICATION
DIMENSIONS	6" Round: 6.33"R X 1.45"D (160.80m X 36.87mm) 4.75" Square: 5.12"H X 5.12"W X 1.42"D (130.0mm X 130.0mm X 36.1mm)
WEIGHT	6" Round: 1.2 lbs (0.54 kg) 4.75" Square: 1.04 lbs (0.47 kg)
MATERIAL	ABS Plastic and Stainless Steel
FREQUENCY	433 MHz
CERTIFICATION	FCC

3 Precautions

CAUTION

- Shut off all power going to header before attempting any wiring procedures.
- Maintain a clean & safe environment when working in public areas.
- Constantly be aware of pedestrian traffic around the door area.
- Always stop pedestrian traffic through the doorway when performing tests that may result in unexpected reactions by the door.
- ESD electrostatic discharge: Circuit boards are vulnerable to damage by electrostatic discharge. Before handling any board ensure you dissipate your body's charge.
- Always check placement of all wiring before powering up to insure that moving door parts will not catch any wires and cause damage to equipment.
- Ensure compliance with all applicable safety standards (i.e. ANSI A156.10/19) upon completion of installation.
- DO NOT attempt any internal repair of the sensor. All repairs and/or component replacements must be performed by LCN, Inc. Unauthorized disassembly or repair:
  1. May jeopardize personal safety and may expose one to the risk of electrical shock.
  2. May adversely affect the safe and reliable performance of the product will result in a voided product warranty.

4 Installation

1 Mounting the Pushplate

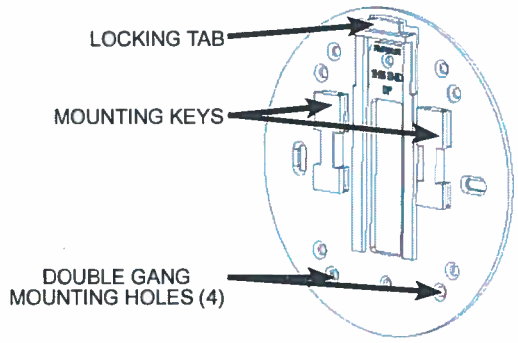

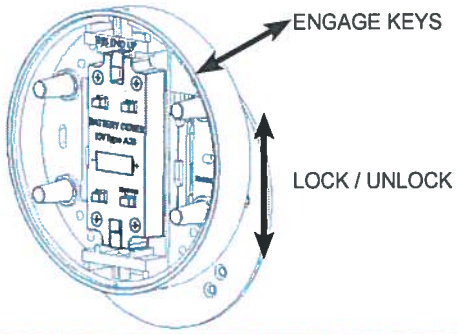

The Wireless Pushplate may be mounted WITH or WITHOUT the mounting plate. To use the mounting plate, screw a minimum of two (2) screws into a solid surface through the holes in the mounting plate (#8 countersunk head screws must be used). The mounting plate must be mounted so that the text side is facing up.

To attach the housing to the mounting plate, place the housing over the key tabs on the mounting plate and then slide the plate downward until the locking tab engages the housing. To remove the housing, press in the locking tab and reverse this procedure.

NOTE: To securely lock the plate, put an additional screw through both the housing and the mounting plate.

2 Pushplate Function

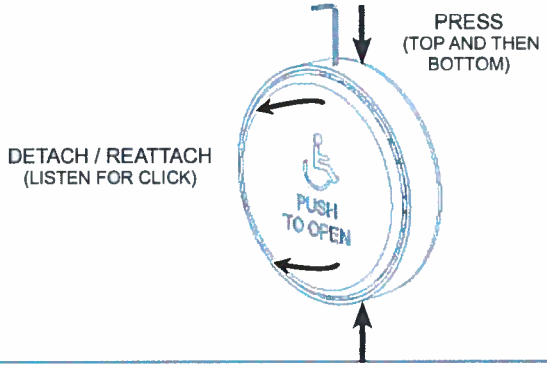

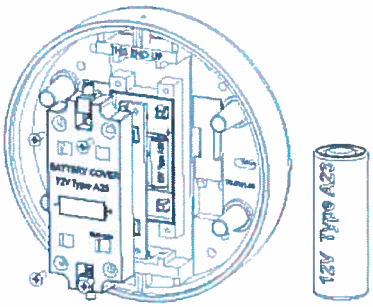

BATTERY LOCATION
(OBSERVE PROPER POLARITY)

To assemble or disassemble the pushplate, use the enclosed hex key (or similar diameter tool) to press in and release the spring clips from the housing. The spring clip will need to be engages / disengages from the top and bottom, one at a time. When the spring clips are correctly engaged, they will make a CLICK. It may be necessary to rotate the faceplate slightly to have them lock correctly.

To replace the battery, remove the faceplate and the four (4) screws holding the battery cover to expose the transmitter assembly. Replace the battery with a fresh 12V (A23) battery and reassemble the pushplate.

WARNING: DO NOT OVER TIGHTEN THE SCREWS ON THE BATTERY COVER. THIS MAY CAUSE THE TRANSMITTER TO BE IN CONSTANT ACTIVATION. THE HEAD OF THE SCREWS SHOULD BE FLUSH WITH THE TOP OF THE PLASTIC COVER.

3 Receiver Setup

For complete Receiver (8310-865, sold separately) Setup & Installation procedures, refer to LCN publication 75.5315 (433MHz Transmitters & Receiver User's Guide).

5 Company Contact

LCN®

CAUTION

Do not leave problems unresolved. If a satisfactory solution cannot be achieved after troubleshooting a problem, please contact LCN at 1-800-526-2400. If you must wait for the following workday to call LCN, leave the door inoperable until satisfactory repairs can be made. Never sacrifice the safe operation of the automatic door or gate for an incomplete solution.

For more information, visit www.lcn.ingersollrand.com.

Appendix - Wiring Diagram

8310–865 RF RECEIVER
SINGLE DOOR WIRING

4630/4640 SERIES
ELECTRIC AUTO–EQUALIZER

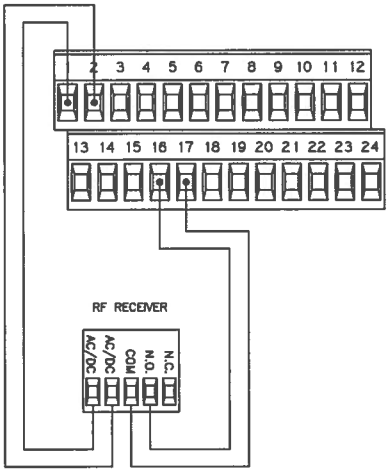

7900 SERIES
PNEUMATIC AUTO–EQUALIZER

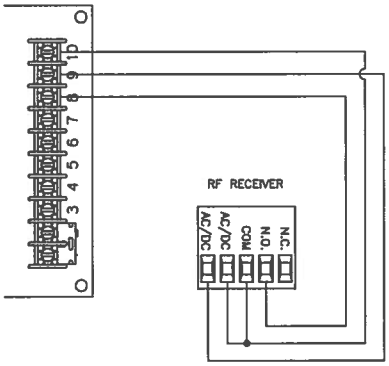

9100 SERIES
BENCHMARK

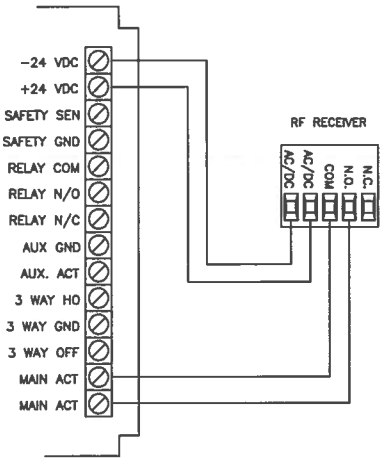

SENIOR SWING – 2800/9500 SERIES
MID SWING – 2900/9700 SERIES

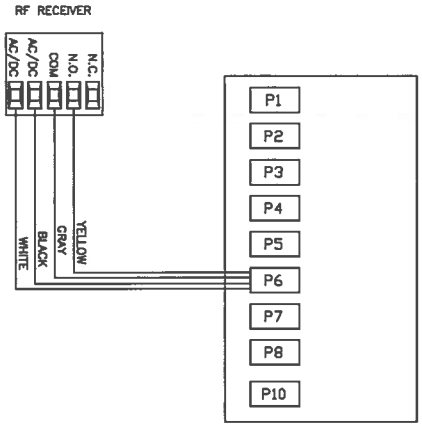

PUSHPLATE BOXES
8310-819F/S, -867F/S, -868F/S, -869F/S USER'S GUIDE

FLUSH AND SURFACE HOUSING FOR PUSHPLATES

1 Description

LCN's line of pushplate hardware is expanded by its line of surface and flush mount pushplate boxes. These boxes are made of durable ABS plastic and are made to securely mount a pushplate and a variety of optional transmitters to activate an automatic door. Many of the boxes have an optional weather ring to give even more weather protection to the switch. They are also designed to attractively recess the pushplate in the housing to and to minimize vandalism from prying up the pushplate.

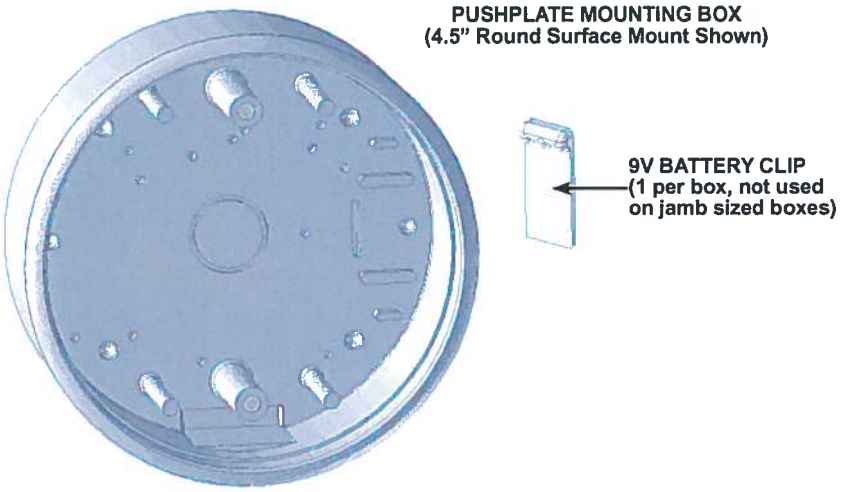

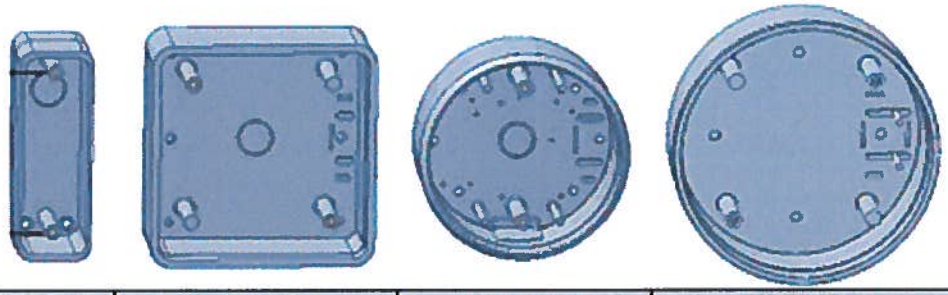

PART NUMBERS	4 3/4" JAMB	4 3/4" SQUARE	4 1/2" ROUND	6" ROUND
SURFACE	8310-819S	8310-867S	8310-868S	8310-869S
FLUSH	8310-819F	8310-867F	8310-868F	8310-869F
WEATHER RING *1*		8310-801	8310-800	8310-802

1 - Optional

2 Precautions

CAUTION

- Shut off all power before attempting any wiring procedures.
- Maintain a clean & safe environment when working in public areas.
- Constantly be aware of pedestrian traffic around the area.
- Always stop pedestrian traffic through the doorway when performing tests that may result in unexpected reactions by the door.
- ESD electrostatic discharge: Circuit boards are vulnerable to damage by electrostatic discharge. Before handling any board ensure you dissipate your body's charge.
- Always check placement of all wiring before powering up to insure that moving parts will not catch any wires and cause damage to equipment.
- Ensure compliance with all applicable safety standards (i.e. ANSI A156.10 / 19) upon completion of installation.
- DO NOT attempt any internal repair of the sensor. All repairs and/or component replacements must be performed by LCN, Inc. Unauthorized disassembly or repair:
  1. May jeopardize personal safety and may expose one to the risk of electrical shock.
  2. May adversely affect the safe and reliable performance of the product will result in a voided product warranty.

3 Installation

1. Prepare the box for installation. If the pushplate is to be hard-wired to the operator, remove either the knockout on the back or bottom of the box. Then route the appropriate wire to the box.

2. Attach the box to the mounting surface. For surface mounted boxes, securely attach the box to the surface using the corner holes. For flush mounted boxes, cut a hole in the mounting surface large enough that the galvanized steel bracket will pass through the hole. Then use a Phillips head screwdriver to tighten the two screws that tighten the bracket to the inside of the wall surface.

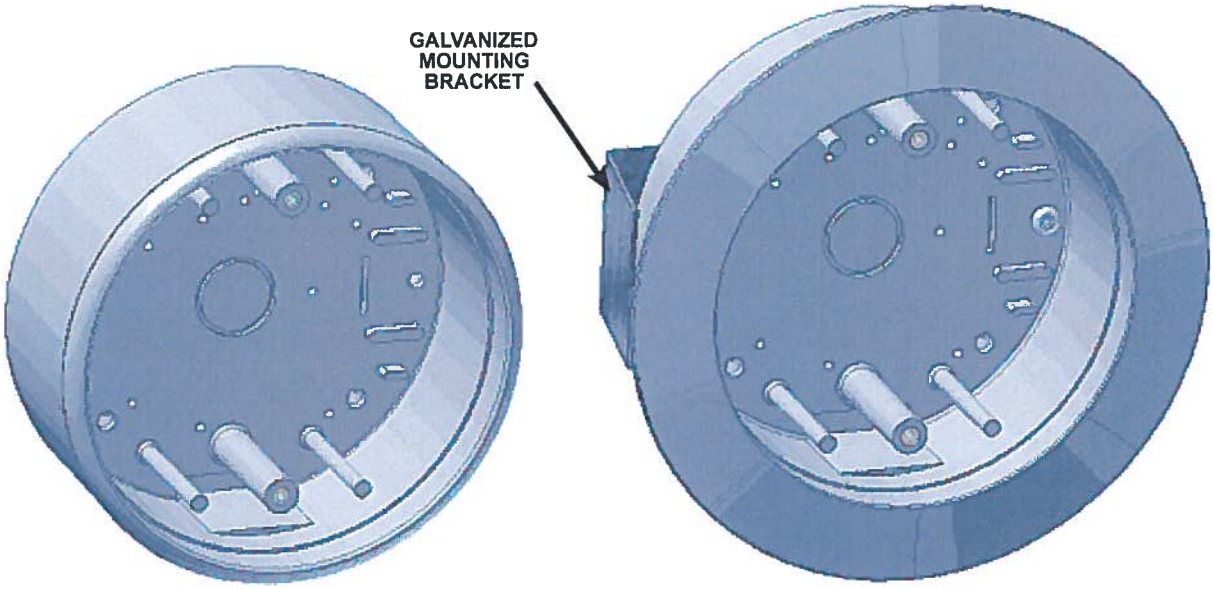

3. If Applicable, mount a radio frequency transmitter to the inside of the housing using either the Velcro enclosed with the transmitter kit or battery clip.

   NOTE: For jamb sized boxes, use the 3V Transmitter (8310-844J).

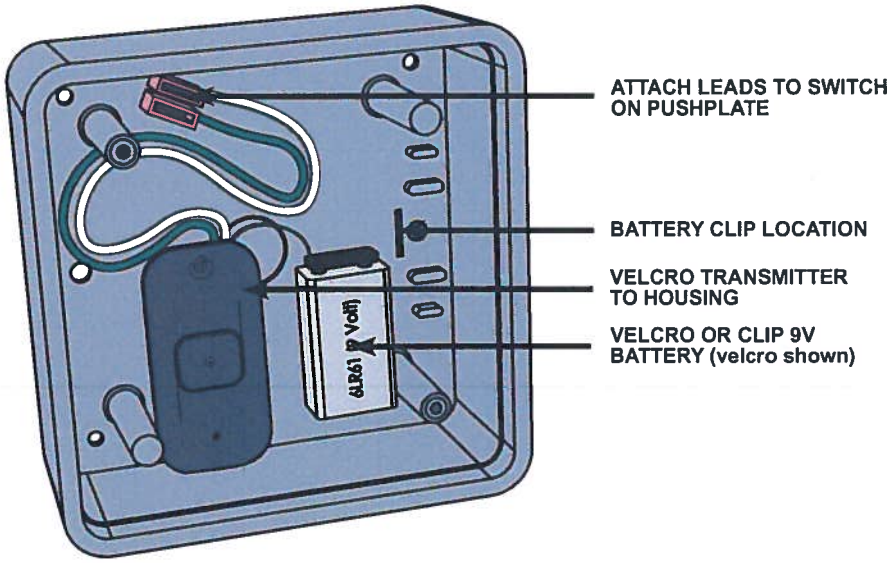

4 Company Contact

LCN®

CAUTION

Do not leave problems unresolved. If a satisfactory solution cannot be achieved after troubleshooting a problem, please contact LCN at 1-800-526-2400. If you must wait for the following workday to call LCN, leave the door inoperable until satisfactory repairs can be made. Never sacrifice the safe operation of the automatic door or gate for an incomplete solution.

For more information, visit www.lcn.ingersollrand.com.

FALCON® Installation Instructions

Falcon Electro-mechanical
Swing Operator

Models: 8230 & 8240

FALCON®
2720 Tobey Drive
Indianapolis, IN 46219
Phone: 1-800-526-2400
FAX: 800-248-1460

Ingersoll Rand
Security Technologies

CONTENTS

GENERAL

The Falcon Operator is a low energy automatic electromechanical swinging door operator for use on hinged, center pivoted and offset pivoted doors. When activated, the Falcon drives the door to full open position, then electrical power is turned off and the door is closed by spring force. The activating circuit opens the door from any position in the closing swing. During a power failure, the Falcon Operator acts as a manual door closer (Size 3). Door opening and closing cycles, including opening speed, back check speed, hold open time delay, closing speed, latch position, and backcheck position are adjustable.

⚠ WARNING
Always disconnect main power to the operator prior to servicing or cleaning.

⚠ CAUTION
This operator is for indoor use only.

⚠ CAUTION
Do not mount any accessories directly to the operator.

REPLACEMENT PARTS & SYSTEM COMPONENTS

Part	26" Header
Control Box	8230-3462SC 8240-3462SC
Gear Box	8230-3454S 8240-3554S

Part	Pull	Standard Push	Finish
Arm Assembly	8230-3077T	8240-3077	US28

26" Pull System
(screw pack not shown)

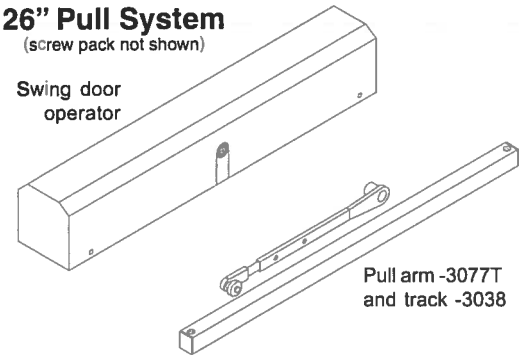

26" Push System
(screw pack not shown)

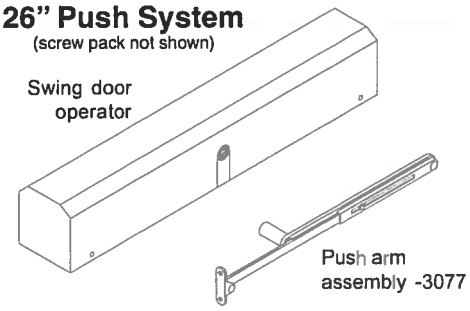

1. PRE-INSTALLATION SITE & PRODUCT CHECK

1.1 Check that the Product Model is correct for the required application.

1.2 Check that all parts listed on the Bill of Material are in the shipping container.

1.3 Check the architectural drawings and final approved shop drawings for the position of frame and structural openings.

1.4 Check header and frame dimensions and required clearances.

Clearances for 26" Pull System and Full Length Pull System

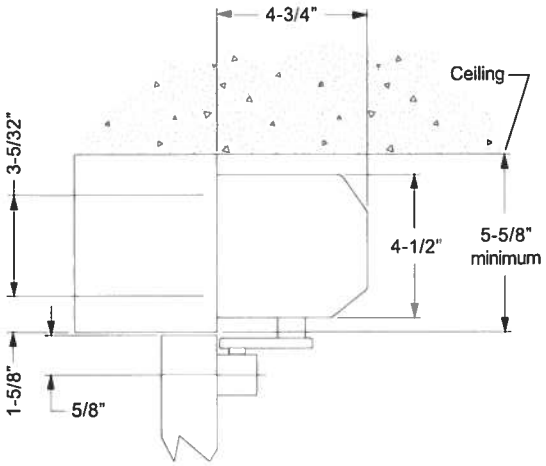

2" frame face minimum
2" top rail in door minimum

Clearances for 26" Push System, Full Length Push System, and Double Push System

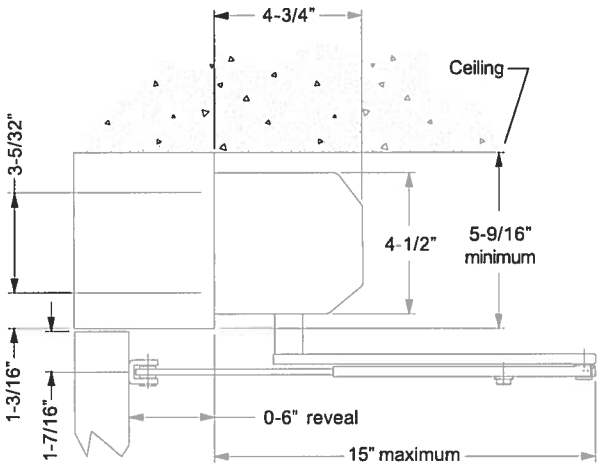

2" frame face minimum
2" top rail in door minimum
5-1/4" top rail in door minimum (flush mount)

1.5 Check Door Width: 26" minimum for 26" Push Operator
30" minimum for 26" Pull Operator

1.6 Check that Door Weight is 200 lbs. or less. For heavier door, consult factory.

1.7 Check that a 115 volt, single phase, 60 Hz, fused 15 amp, 3-wire power supply is available at the side jamb with approximately 12" of wire available to connect to the Operator. UL approved flexible conduit is recommended for the 115 volt power line.

The 115 volt power supply must be a dedicated circuit from the main circuit breaker panel and must **NOT** be connected into any building lighting system that operates florescent lights.

2. OPERATOR INSTALLATION

2.1 Remove Control Box from Operator Mounting Bracket, then remove Motor/Gearbox from Bracket:

Control Box and Motor/Gearbox Removal
26" Pull, 26" Push

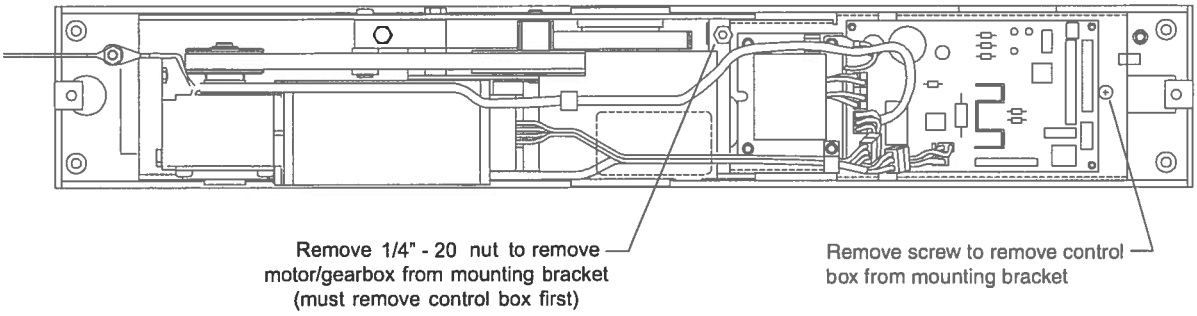

2.2 Prepare Header/Frame and Door: 26" Pull System .....See below
26" Push System .....Page 5
Drop Mount Application .....Page 5

2.3 Install Operator Mounting Bracket on Header/Frame.

2.4 Install Motor/Gearbox on Operator Mounting Bracket. Then install Control Box on Bracket.

2.5 Proceed to Chapter 3: Wiring (*Page 6*).

⚠ CAUTION

When mounting to an aluminum frame, the use of rivet nuts is strongly recommended.

26" Pull System
Header/Frame and Door Preparation

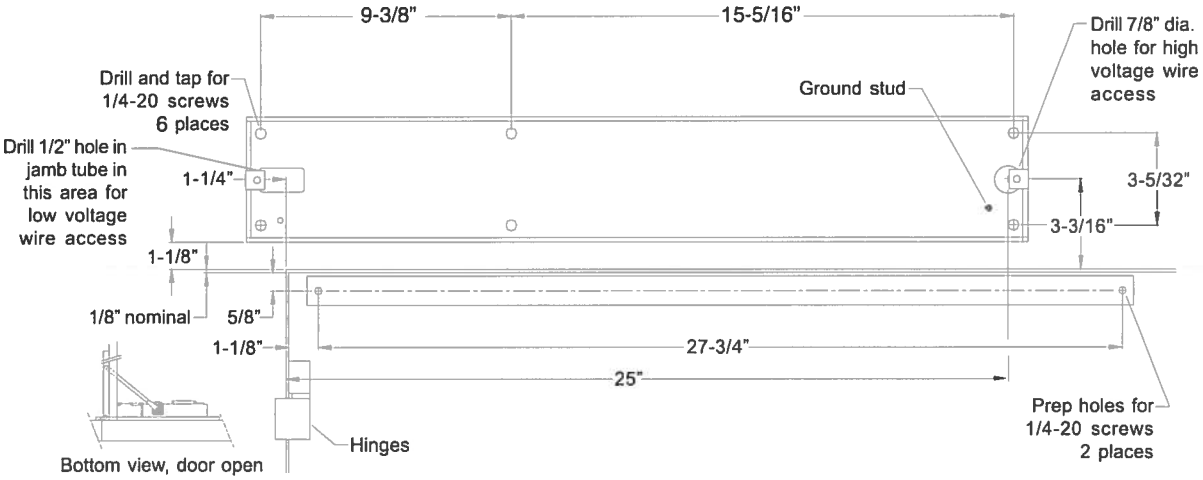

26" Push System
Header/Frame and Door Preparation

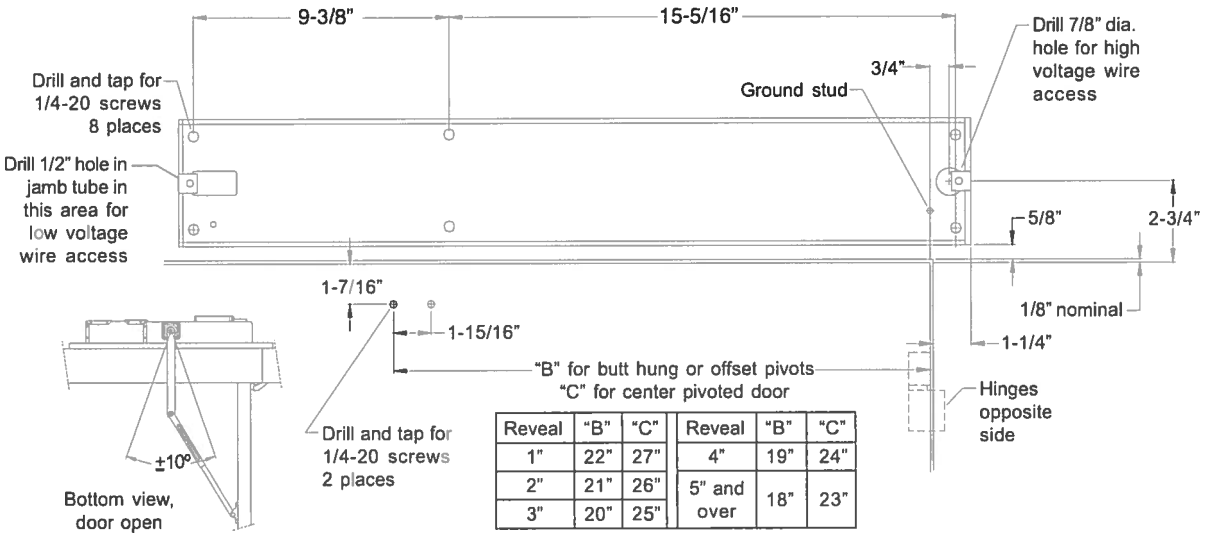

Reveal	"B"	"C"	Reveal	"B"	"C"
1"	22"	27"	4"	19"	24"
2"	21"	26"	5" and over	18"	23"
3"	20"	25"			

Drop Mount Application (26" Push System Only)
Header/Frame and Door Preparation

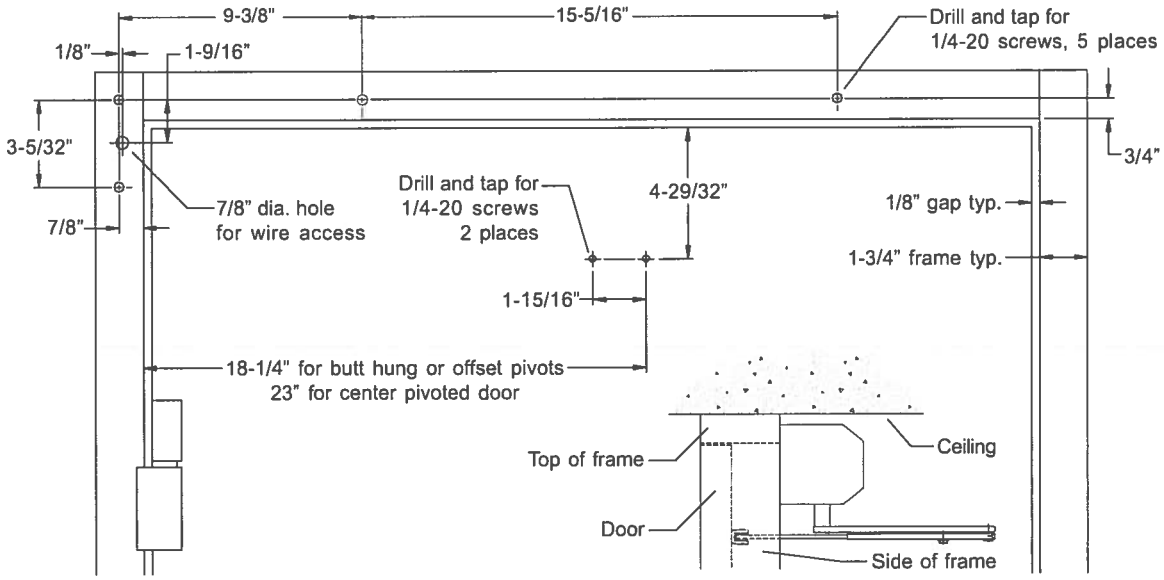

3. WIRING

CAUTION

- **Make sure all wires are properly dressed and secured to prevent interference**
- **Route all wiring away from moving parts, sharp edges, and heat sources**
- **Use copper conductors only**
- **Do not modify the factory wiring or connect into existing electrical circuits or devices**

3.1 Refer to the appropriate wiring diagram for the Control Box (*Page 14*) or the diagram supplied for custom applications.
Connect the following cables:

- **Ground Cable (Ground the Operator properly with the earth from main supply)**
- **Hall Effect Cable (Do not wrap the Hall Effect Cable around the Motor Power Cable)**
- **Motor Power Cable (Do not wrap the Motor Power Cable around the Hall Effect Cable)**
- **Control Box Power Cable**

3.2 Connect Activate and lock accessories, as needed.
Refer to the accessory instructions for any accessories used.
Do not connect any remote activating device to the door unless it is located within line of sight of the door.

3.3 When wiring is complete, proceed to Chapter 4: Arm and Cover Installation (*Page 7*)

4. ARM & COVER INSTALLATION

WARNING

Keep hands, clothing, wires, tools, etc., AWAY FROM Operator Motor when the Operator Motor is turned on

4.1 Make sure the Operator Powers is not connected.

4.2 Install a jumper across the control box Main Act and Main Act.

4.3 Connect power.
The operator motor will activate and drive to the Full Open position.

4.4 Attach the arm to the operator spindle loosely with the 8mm socket head screw.
For push systems, ensure that the adjusting boss is inserted correctly.

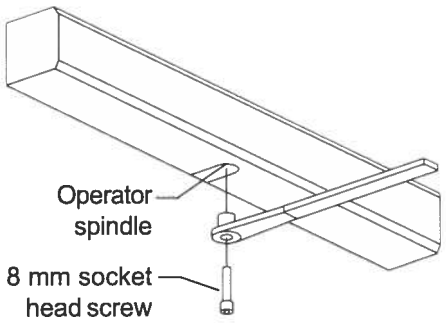

4.5 Attach the arm to the door.

4.5.1 For push systems, attach the push arm shoe to the door:

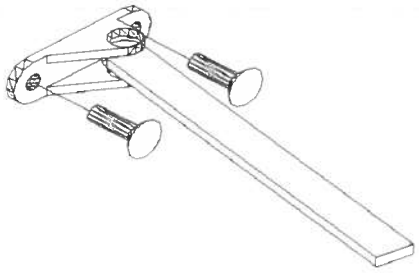

4.5.2 For pull systems, slide the pull arm roller into the track, then insert a track cap on each end of the track and attach the track to the door:

Pull Arm

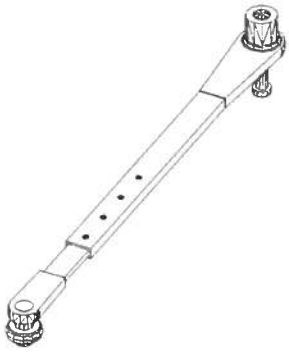

4.6 Adjust arm:

4.6.1 For pull systems, remove the locking screw from the arm.

4.6.2 For push system, remove the locking screw from the arm.

Pull Arm

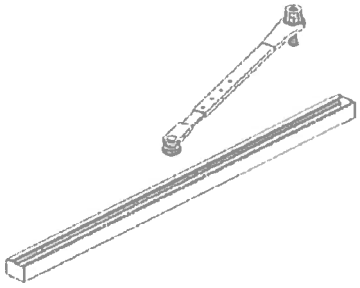

Push Arm

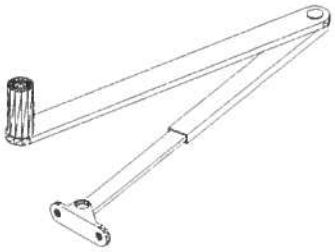

4.6.3 Keep the door in the full open position and adjust the arm length as necessary to align the door at 90 degrees from closed.

When the arm is adjusted to the correct length, tighten the 8mm socket head screw that secures the arm to the operator spindle.

Ensure this screw is secure, then tighten the arm locking screw.

4.7 Disconnect power. The door should close.

4.8 Remove the jumper from the control box Main Act and Main Act.
4.9 Test the operator. (See Chapter 5: Operational Check on *Page 9*)

4.10 Adjust the operator as required. (See Chapter 6: Operator Adjustment on *Page 10*)
4.11 Install the cover assembly onto the operator.

4.12 Release the operator for service. (See Chapter7: Release for Service on *Page 12*)

5. OPERATIONAL CHECK

5.1 Activate the operator using the activation device.
The operator will perform one sizing cycle.

Sizing Cycle: Occurs after power is turned on and a legitimate activation signal is received. During the sizing cycle, the door opens and closes one time.

5.2 If the Door does NOT OPEN AT ALL during the sizing cycle:

- Check the door for binding.
- If an electromechanical lock is being used, check that the lock disengages before the operator opens the door.
- Check fuses, circuit breakers and connections.
- Adjust the operator and check the door operation
  (See chapter 6: Operator Adjustment on *Page 10*)

Opening Speed	75%
Back Check Speed	75%
Hold Open Time Delay	Minimum
Latch Position	Maximum
Closing Speed	50%
SW1 1,2,3,4	OFF

5.3 If the door does NOT OPEN FULLY during the sizing cycle:

- Check the door for binding.
- Increase the back check speed slightly and re-check the door operation.
  Repeat until door opens fully.

5.4 If the door SLAMS OPEN during the sizing cycle, decrease the back check speed slightly and re-check the door operation. Repeat until the door opens without slamming.

5.5 After the sizing cycle is completed and the door(s) are closed, apply a maintained activation signal. Check that the door remains open while the signal is applied.

5.7 When the door is operating properly, continue with Step 4.10 on *Page 8*.

6. OPERATOR ADJUSTMENT

See table below and diagrams (*Page 11*) for operator feature adjustment.

After adjusting, cycle the door several times to check for proper operation.
Then continue with Step 4.11 on *Page 8*.

NOTE

Adjust Operator for the SLOWEST operation practical, in accordance with the latest revisions of the Americans with Disabilities Act (ADA); ANSI/BHMA A156.19 Standards for Power-Assisted and Low Energy Power-Operated Doors; and local codes.

Opening Speed: 5 seconds or more

Latch Location: 10 degrees or more

Closing Speed: 3 seconds or more

Latch Speed: 1.5 seconds or more

Features	Control	Description	Counter Clockwise	Clockwise
Opening Speed	Opening Speed	Controls opening speed of door	Slower	Faster
Back Check Speed	Back Check Speed	Controls the speed of the door near the full open position to prevent door slamming	Slower	Faster
Hold Open Time Delay	Hold Open Time Delay	Controls the length of time the door remains in the full open position: 1 sec to 15 sec	Less Time Down to 1 sec	More Time Up to 15 sec
Back Check Position	Back Check Position	Door position where back check speed engages	Less Pressure Required	More Pressure Required
Latch Position	Latch Position	Door position at which deceleration towards full closed begins in order to prevent door slamming	Less Latch	More Latch
Closing Speed	Closing Speed	Controls closing speed of door	Slower	Faster
Delayed Activation	DLY	Delays opening of door for strike applications (1 second delay)		
Push and Go	PNG	ON: Pushing the door open 5° causes operator to open door for remainder of open cycle		
	SW4	Not used		

6. OPERATOR ADJUSTMENT (CNTD)

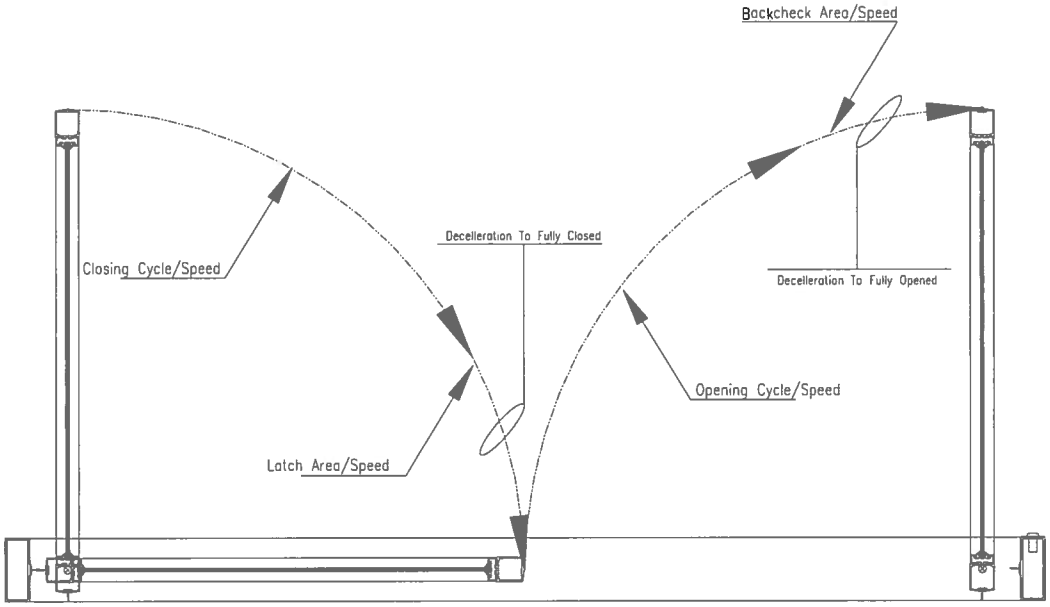

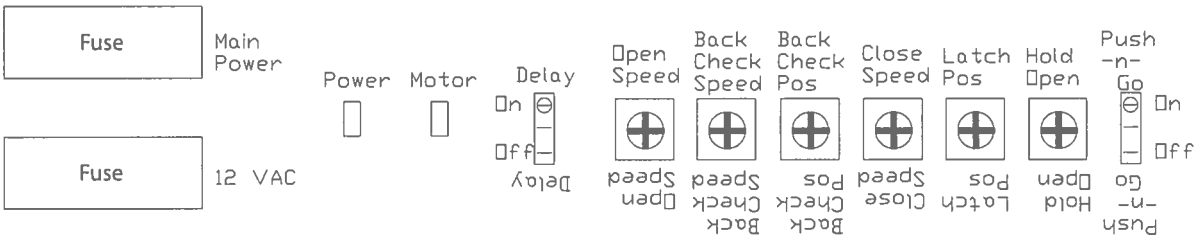

7. RELEASE FOR SERVICE

7.1 Remove all tools, installation equipment and debris from the vicinity of the door.

7.2 MANDATORY: Install all Safety, Traffic Control and Instruction Labels onto the door, as required.

Failure to do this will leave the INSTALLER LIABLE for any accidents that occur.

7.3 Give verbal instruction on how to properly operate the door to the owner or person in charge.

7.4 Give verbal instruction to the owner or person in charge on periodic inspection of the door for the following:

- Occasional damage
- Developing problems
- Minor preventative maintenance

7.5 Provide the owner or person in charge with a contact name and phone number to call for future service and maintenance.

IMPORTANT
Be sure to install all Safety, Traffic Control and Instruction Labels onto the door, as required

8. FALCON SOFTWARE

8.1 Operation:

8.1.1 Sizing

From start-up (Sizing), the door will activate via:

• 1-Way Input (Main Act and Main Act).

The first motion of the door will be towards the Door Open position. The speed during Sizing is automatic and cannot be set from a potentiometer.

The door drives to full open and the system sets the open counter to full open.

The door closes at Closing Speed. The system sets the closed counter to Full Closed when the latch goes up at the Closed position.

The system calculates all other parameters required for normal operation based on the two values of Full Open and Full Closed.

8.1.2 Standard Operation

Upon a legitimate activation signal, the door accelerates to opening speed while monitoring the current load on the drive output. If the current exceeds the specified level, the door will stop and close.

The door travels at it's set speed (based on the potentiometer setting) until it reaches the Back Check position, where it will decelerate to the Back Check Speed.

The door will stop at the Hold Open position and remain there until an activation or the Hold Open Timer is cleared.
The door then closes at its Closing Speed (based on the potentiometer setting) up to the latched position.

If the Closing Speed is decreased by driving the motor in the open direction (a fixed setting), power is added to allow the spring to continue closing the door to the Full Closed position.

8.3 Wiring

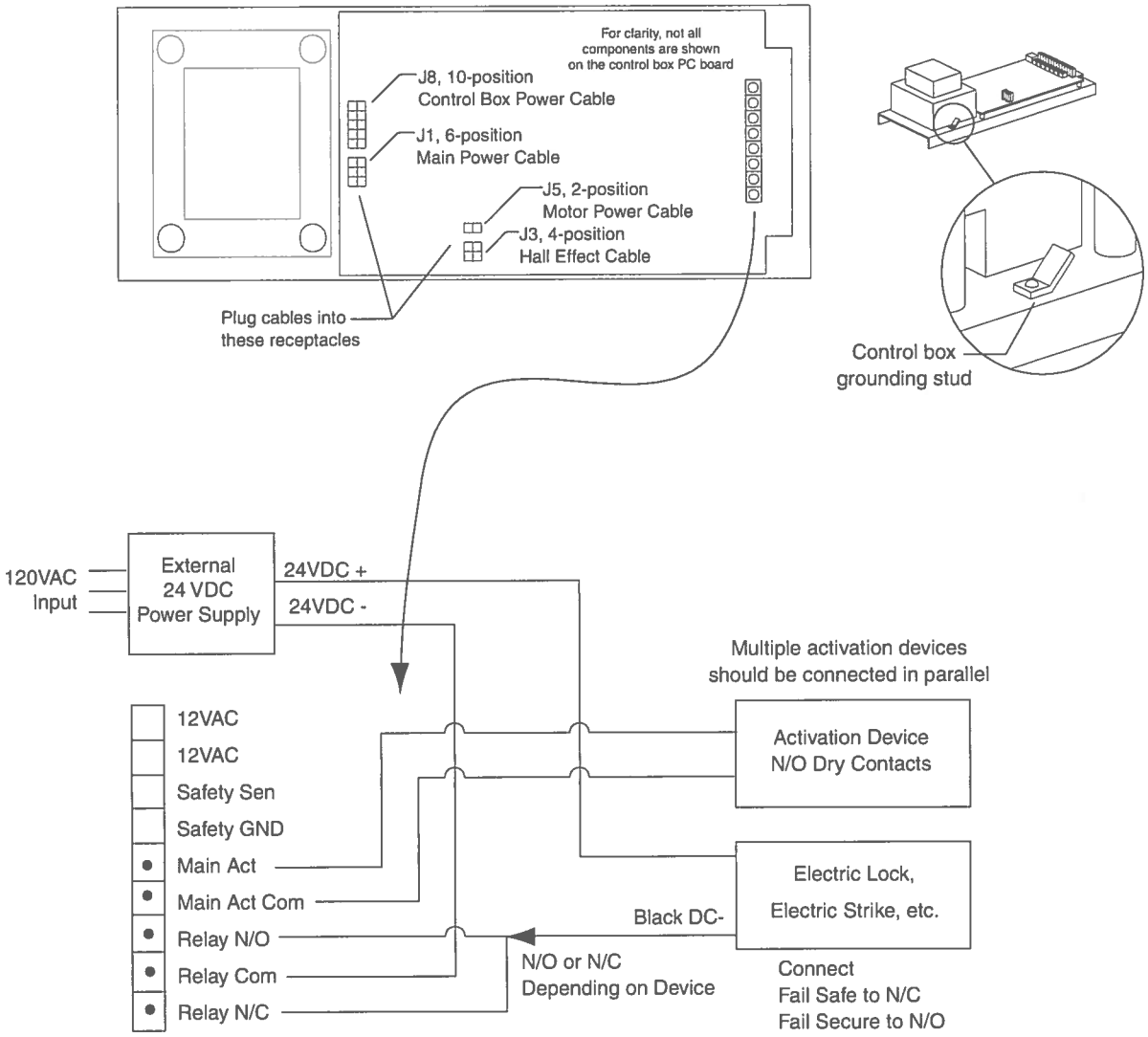
For clarity, not all components are shown on the control box PC board
J8, 10-position
Control Box Power Cable
J1, 6-position
Main Power Cable
J5, 2-position
Motor Power Cable
J3, 4-position
Hall Effect Cable
Plug cables into these receptacles
Control box grounding stud
120VAC Input
External 24 VDC Power Supply
24VDC +
24VDC -
Multiple activation devices should be connected in parallel
12VAC
12VAC
Safety Sen
Safety GND
Main Act
Main Act Com
Relay N/O
Relay Com
Relay N/C
Activation Device N/O Dry Contacts
Electric Lock, Electric Strike, etc.
Black DC-
N/O or N/C Depending on Device
Connect
Fail Safe to N/C
Fail Secure to N/O